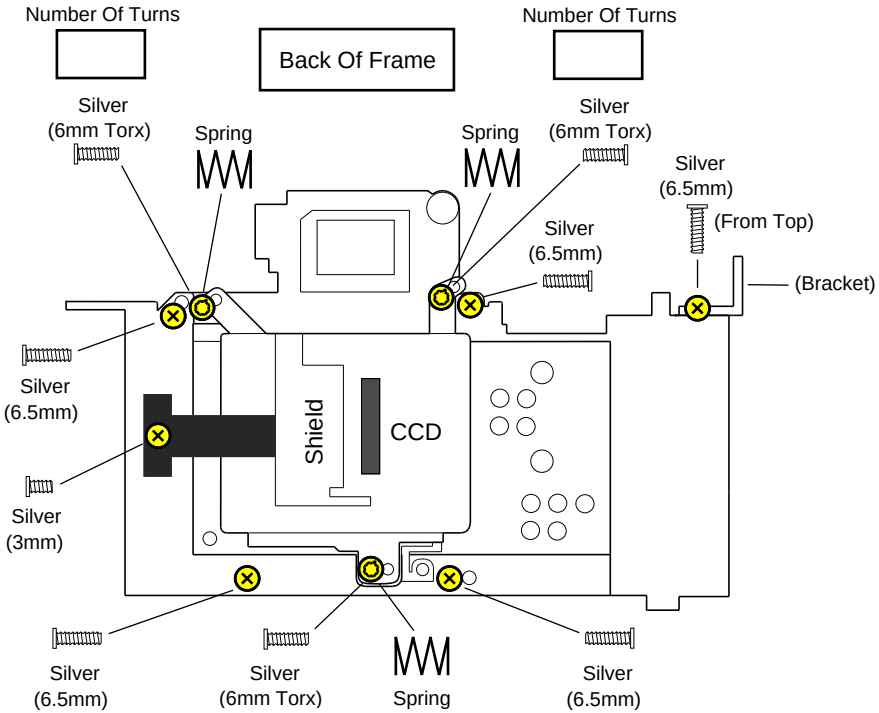

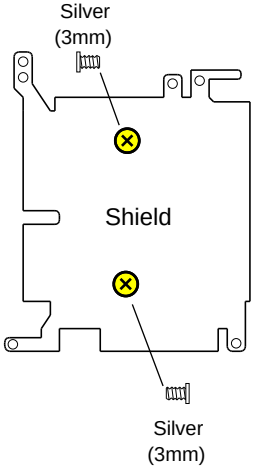

Apply double-sided tape over the tops of the yellow screws shown in the diagram. Then, after removing a screw from the camera, stand the screw on it's head on the correct yellow screw location on the diagram. The tape will help secure the screws should you need to move the paper.

Note:
The screws shown in the diagram are at 100% scale. The camera outlines are not though. They are at approximately 60% of the actual scale.

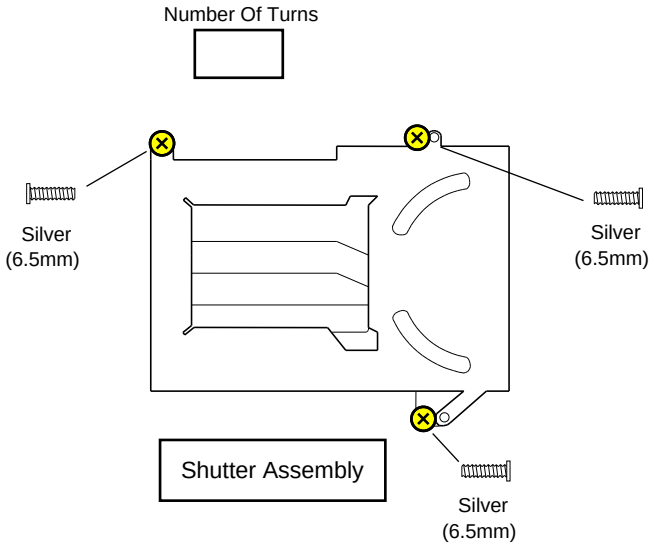

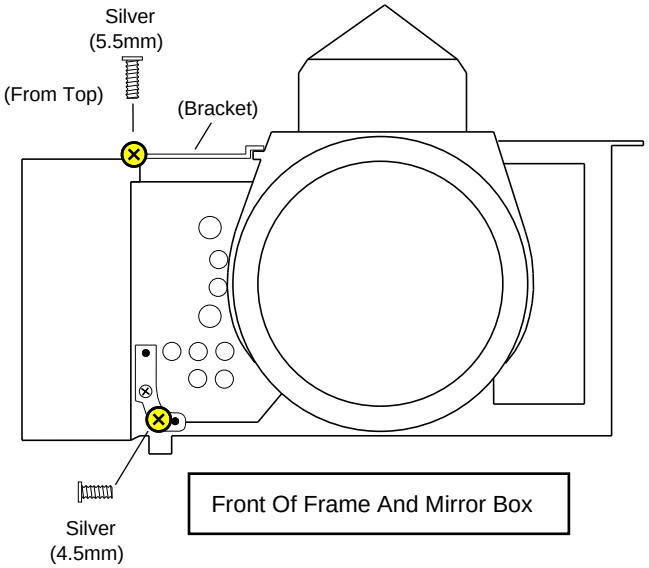

Copyright © 2019, Robert E. Hosea, Libby Montana - Visit me on Facebook at Facebook/TheBobFactor/ and at www.TheBobFactor.com